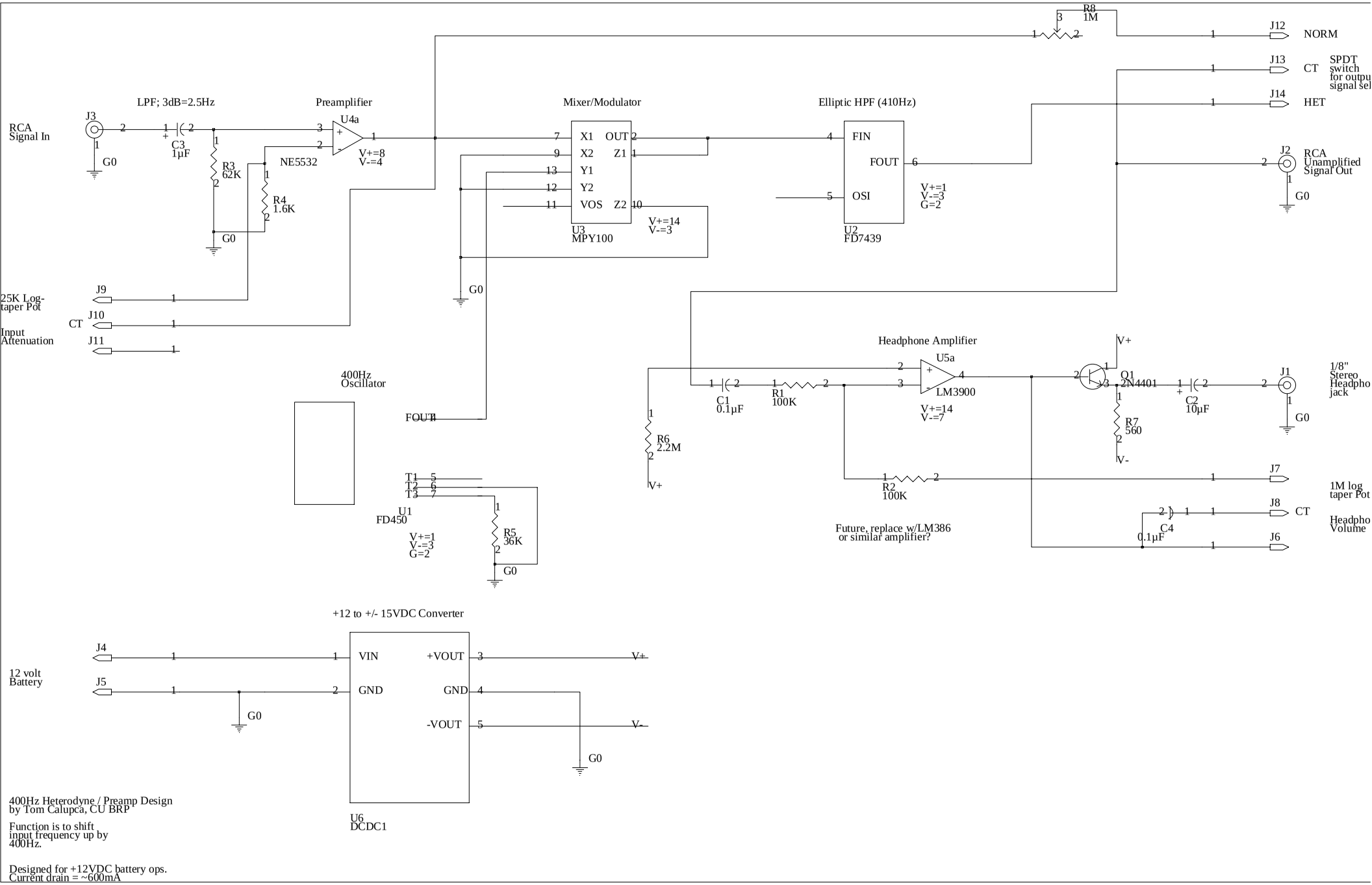

400Hz Heterodyne / Preamp Design
by Tom Calupca, CU BRP

Function is to shift
input frequency up by
400Hz.

Designed for +12VDC battery ops.
Current drain = ~600mA